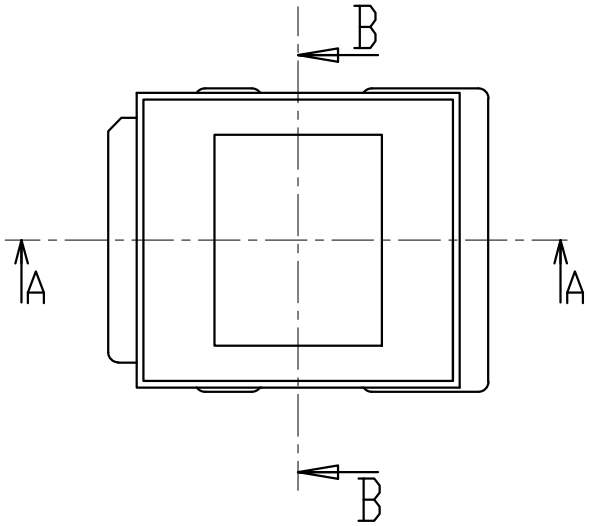

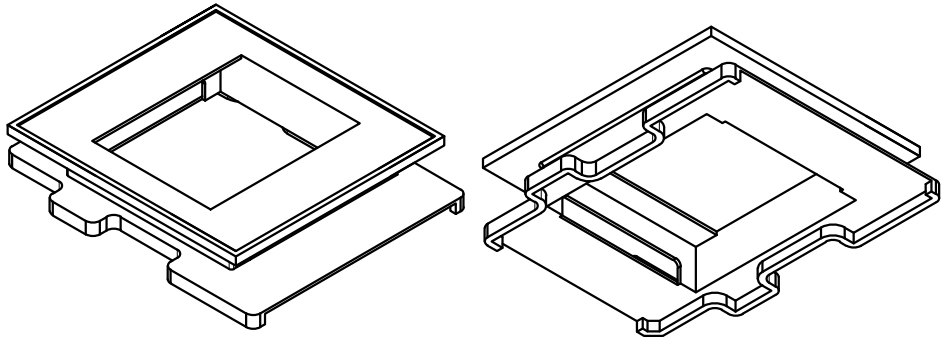

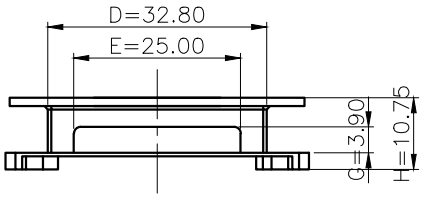

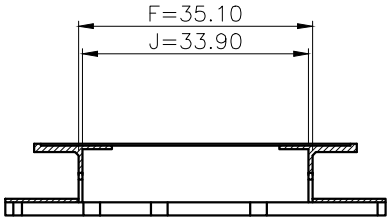

SCETION A-A

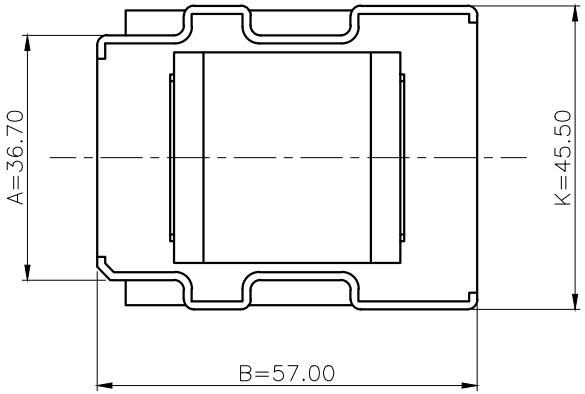

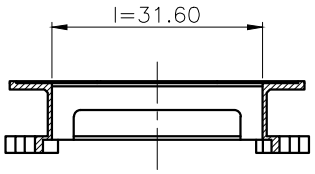

SCETION B-B

MARK	REVISION NOTE	DATE	DRAWN	CHECKED	APPROVED
4					
3					
2					
1					

DRAWN	CHECKED	APPROVED	MATERIAL : P.E.T	UL REC. : UL94V-0	THIRD ANGLE PROJ.	SCALE : 1/1
Dae Soo, Kim	Hyoung Seok, Lee	Chul, Park		DATE : 2010.06.28	TOLERANCE :±0.2 (Unless otherwise specified)	UNIT : m/m

주식회사 대흥보빈
DAE HEUNG BOBBIN CO., LTD

TITLE: EFD 45*49 CAP (B)

DWG NO: DH-100715-8604-03